REVISIONS						
ZONE	LTR	DESCRIPTION	CHANGE No	DATE	BY	APPR'D
	AA	INITIAL RELEASE	DR95691	15MAY23	JTK	BLM

FLASH AND PARTING LINE MISMATCH

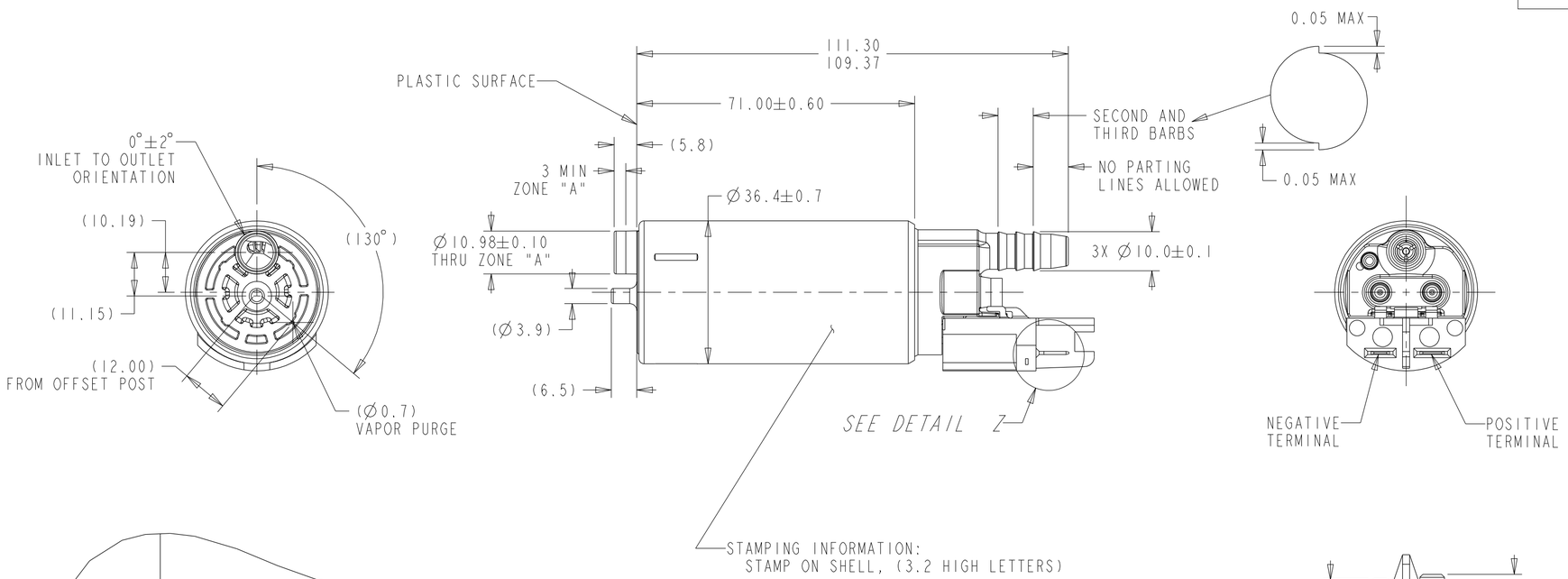

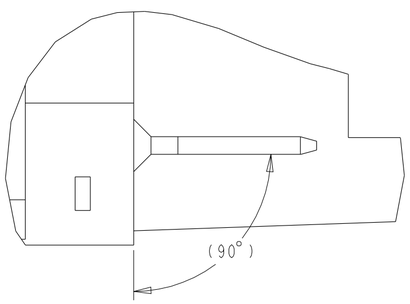

DETAIL Z
SCALE 5:1
(BOTH BLADES)

NOTES:

1. PUMP SHALL BE SUITABLY PACKAGED TO PREVENT CONTAMINATION WITH FOREIGN MATERIAL.
2. CUSTOMER MUST FOLLOW TI AUTOMOTIVE SPECIFICATION S-448 WHEN HANDLING THIS PUMP.
3. TERMINAL BLADES DESIGNED TO SAE J858a TYPE IB EXCEPT FOR DIMENSION G (THICKNESS) WHICH IS 0.81.
4. MINIMUM RECOMMENDED WIRE GAGE: 14.
5. MODEL: TI.9

KEY PRODUCT CHARACTERISTICS

REFER TO TI AUTOMOTIVE GLOBAL ADVANCED QUALITY PLANNING DOCUMENT CW-4-ALL-411 FOR THE CLASSIFICATION AND CONTROL OF KEY PRODUCT CHARACTERISTICS

TYPE OF CHARACTERISTIC	SAFETY	REGULATORY	FUNCTION	FUNCTION PROCESS
	S SC	R SC	SC F	SC F KPC
NUMBER PER EACH CHARACTERISTIC	--	--	--	--
TOTAL NUMBER OF CHARACTERISTICS	--			

- TI AUTOMOTIVE CONFIDENTIAL AND PROPRIETARY -
THIS DRAWING IS PROPERTY OF TI AUTOMOTIVE. TI AUTOMOTIVE CLAIMS PROPIETARY RIGHTS IN THE SUBJECT MATTER SHOWN AND DESCRIBED ON THIS DRAWING AND RETAINS ALL INTELLECTUAL PROPERTY RIGHTS. THE DRAWING IS PROVIDED FOR REFERENCE PURPOSES ONLY AND ON THE EXPRESS CONDITION THAT IT WILL BE HELD IN CONFIDENCE. THIS DRAWING SHALL NOT BE DISCLOSED TO OTHERS OR USED FOR THE PURPOSE OF MANUFACTURE BY OR PROCUREMENT FROM OTHERS OF THE ARTICLE OR PART SHOWN WITHOUT TI AUTOMOTIVE'S EXPRESS WRITTEN CONSENT. NO LICENSE OR OTHER RIGHT IS GIVEN OR IMPLIED BY THE PROVISION OF THIS DRAWING TO RECIPIENT.
COPYRIGHT, TI AUTOMOTIVE 2018, ALL RIGHTS RESERVED.

METRIC
ALL DIMENSIONS ARE IN MILLIMETERS

DO NOT SCALE
DECIMAL TOLERANCES UNLESS OTHERWISE SPECIFIED
ONE PLACE ±0.25 TWO PLACE ±0.13 ANGLES ±1°

THIRD ANGLE PROJECTION

DIMENSIONS IN ACCORDANCE WITH ASME Y14.5 - 2009

TI Automotive
630 COLUMBIA ST.
CARO, MI 48723
+1 989.673.7727

ENGINEER:	B.MIDDLETON	18MAY23	MATERIAL/SPECIFICATION: SEE NOTES
DESIGNER:	J.KULIGOWSKI	18MAY23	
CAD SYSTEM: PRO/E	SCALE: 1:1	SHEET NO. 1 OF 1	
REFERENCE ID/REV.: HJQG0112		2D PLM REFERENCE/REV.: AR3105388/AA	
REFERENCE ID/REV.: 300114800/AA		3D PLM REFERENCE/REV.: AR3105386/AA	
DRAWING NAME: FUEL PUMP OUTLINE			
SIZE: A2	DRAWING NUMBER: F10000370		